28.01.2019

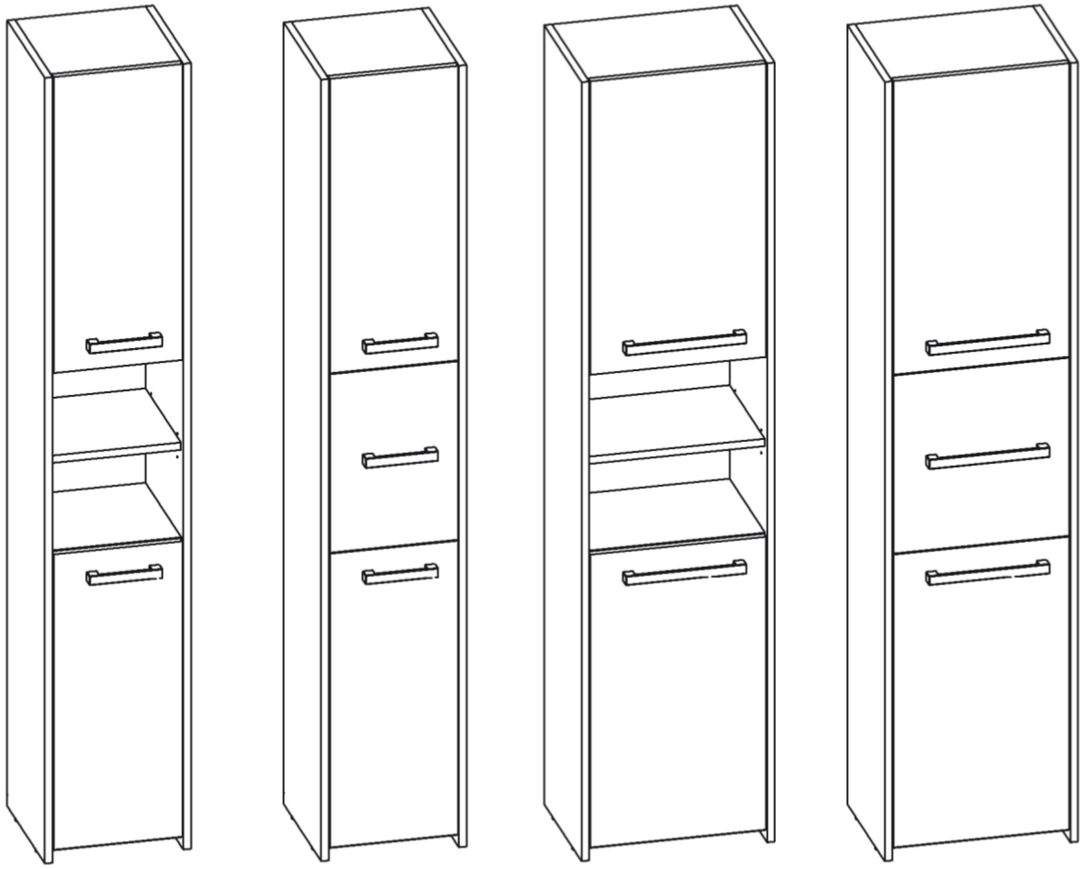

Model “30” Model “33” Model “40” Model “43”

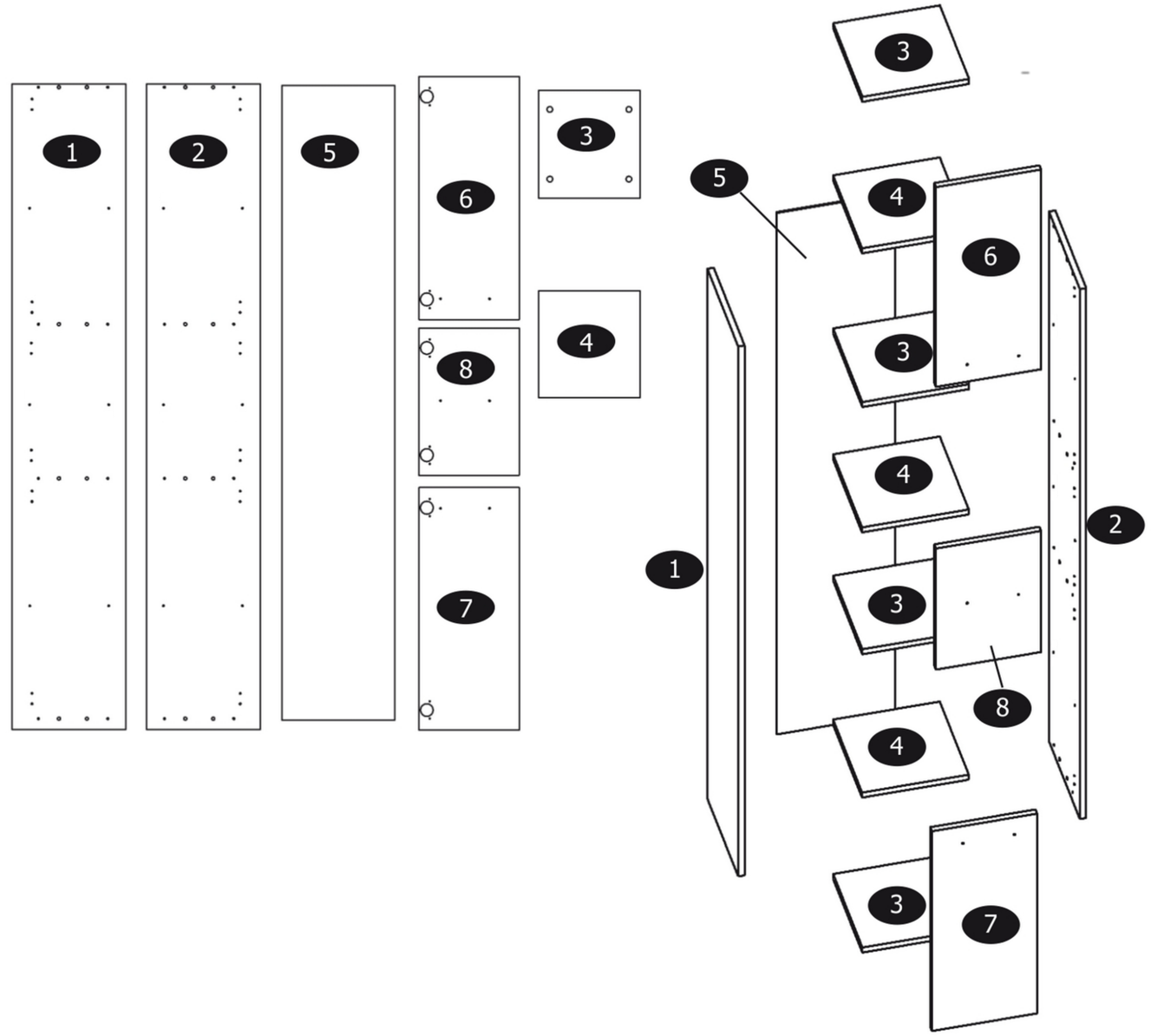

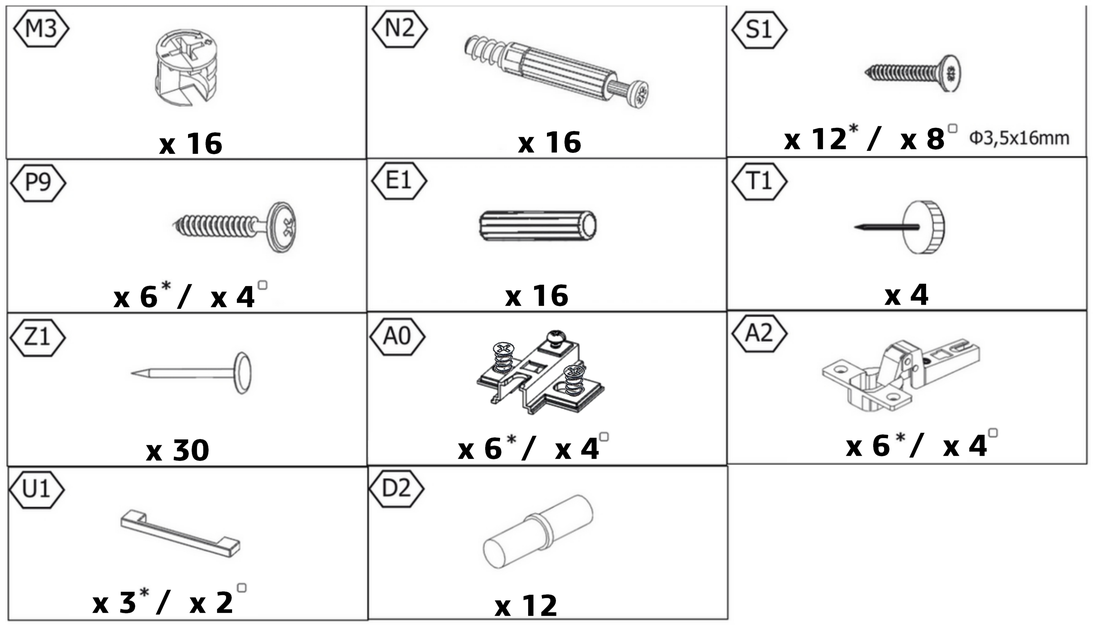

□ Model “30”, Model “40”
* Model “33”, Model “43”

	Model “30”	Model “33”	Model “40”	Model “43”
1	x1	x1	x1	x1
2	x1	x1	x1	x1
3	x4	x4	x4	x4
4	x3	x3	x3	x3
5	x1	x1	x1	x1
6	x1	x1	x1	x1
7	x1	x1	x1	x1
8	x0	x1	x0	x1

1

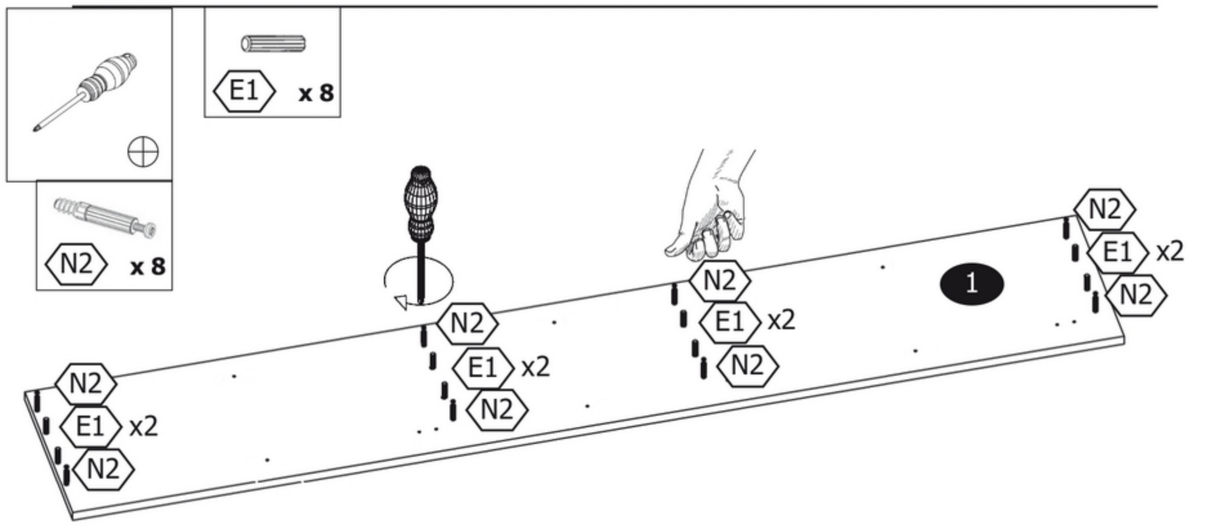
E1 x 8
N2 x 8
N2
E1 x2
N2
1

2

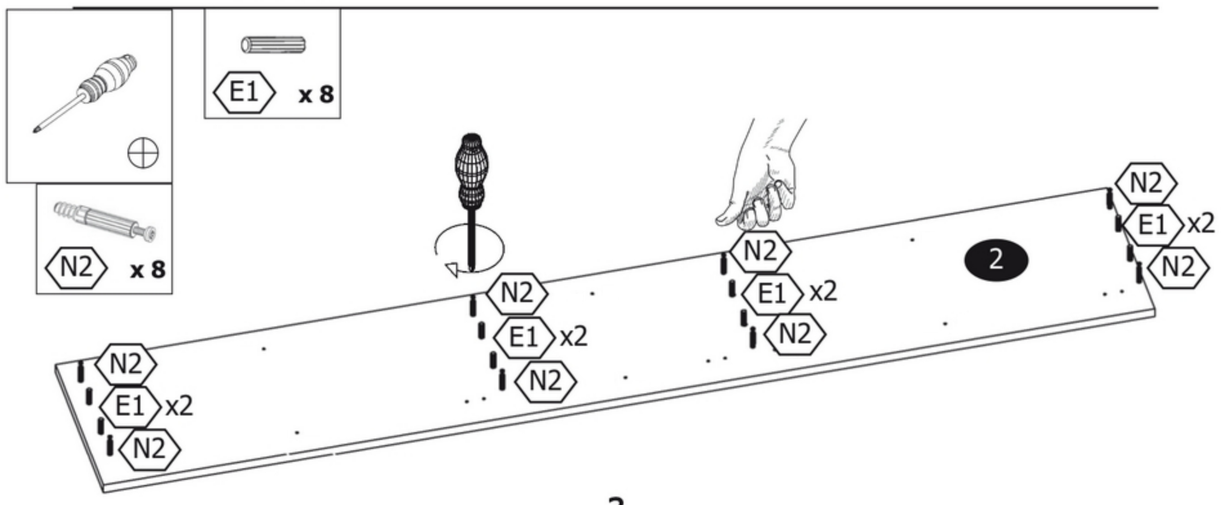
E1 x 8
N2 x 8
N2
E1 x2
N2
2

3

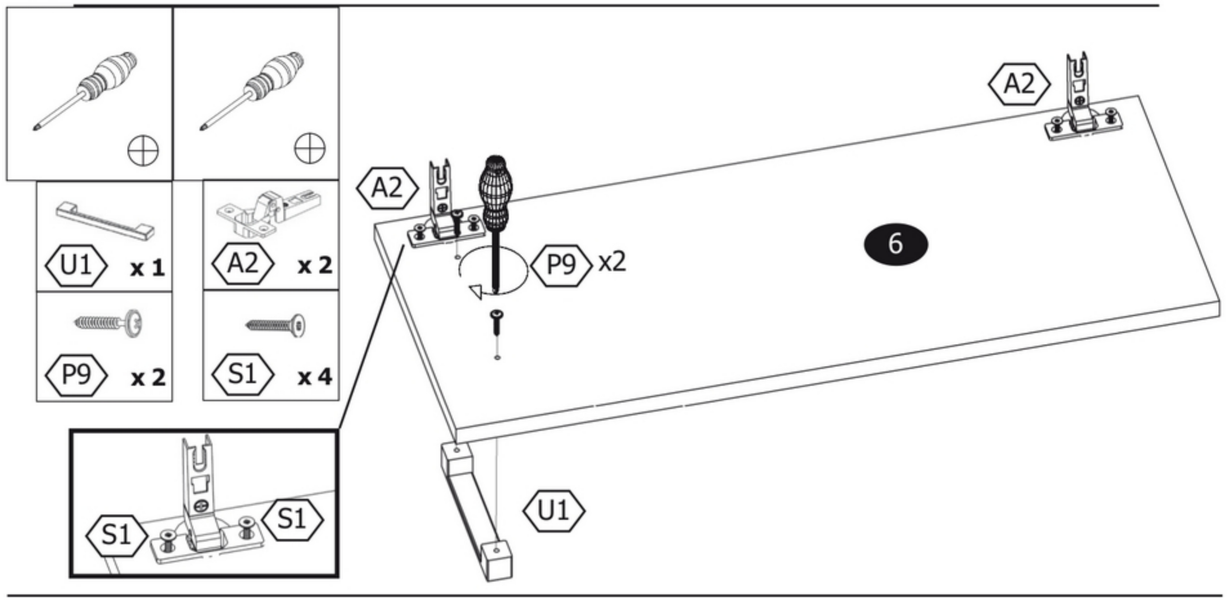
U1 x 1
A2 x 2
P9 x 2
S1 x 4
A2
P9 x2
S1
U1
6

4

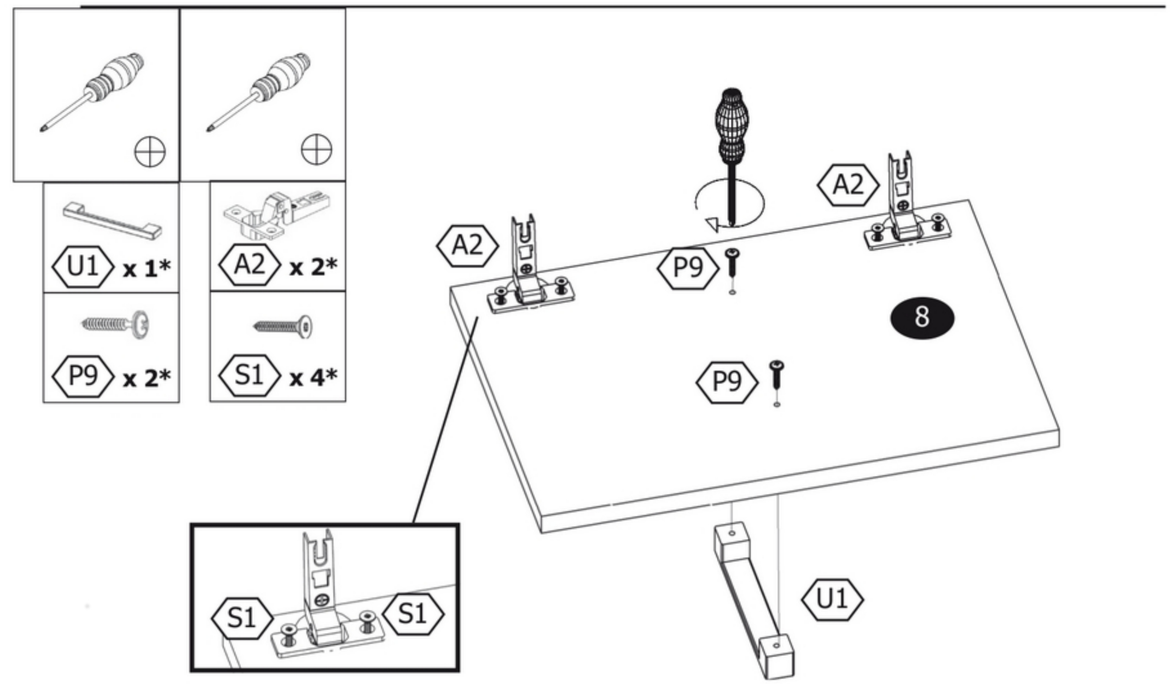
U1 x 1*
A2 x 2*
P9 x 2*
S1 x 4*
A2
P9
S1
U1
8

5

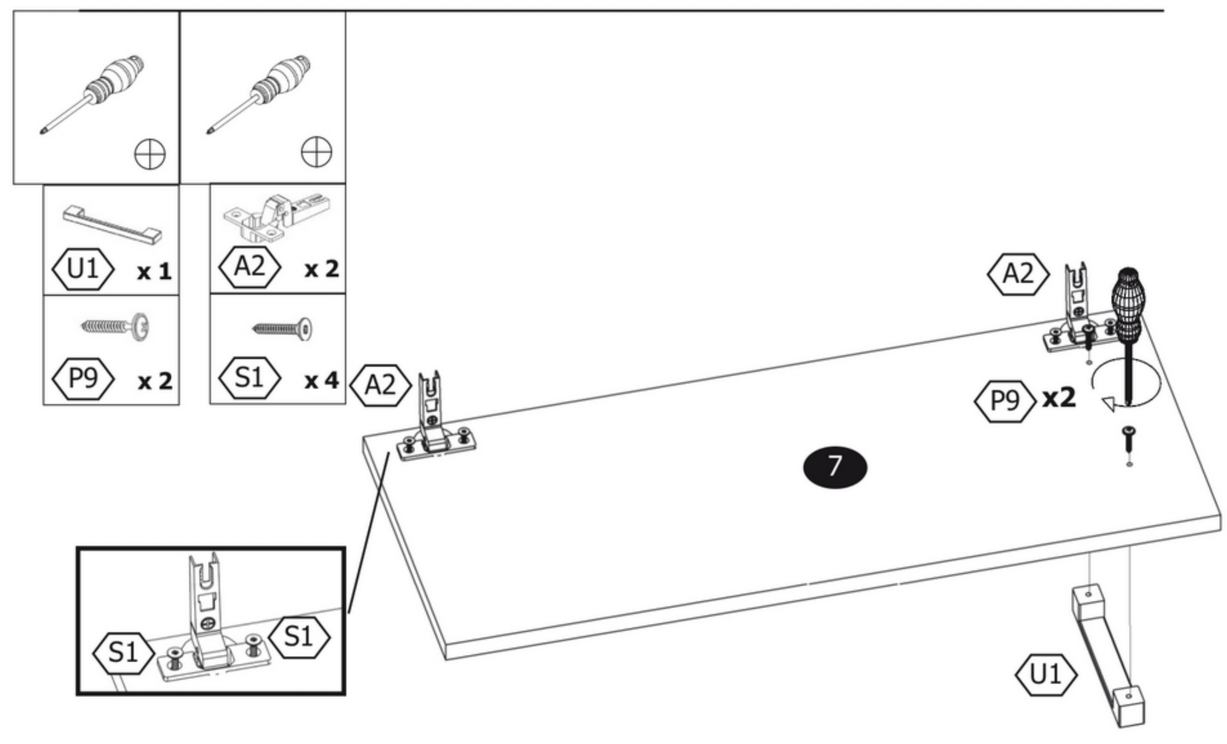
U1 x 1
A2 x 2
P9 x 2
S1 x 4
A2
P9 x2
S1
U1
7

6

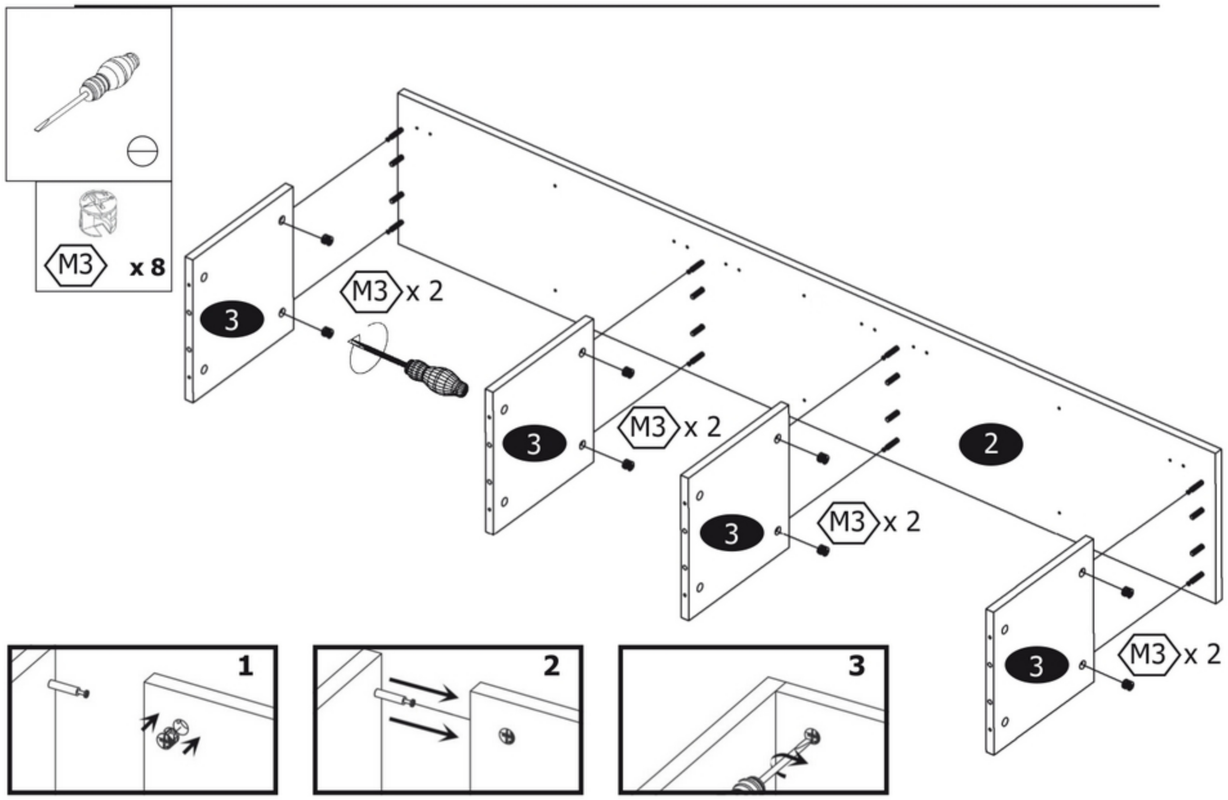
M3 x 8
3
M3 x 2
3
M3 x 2
3
M3 x 2
2
3
M3 x 2
1
2
3

7

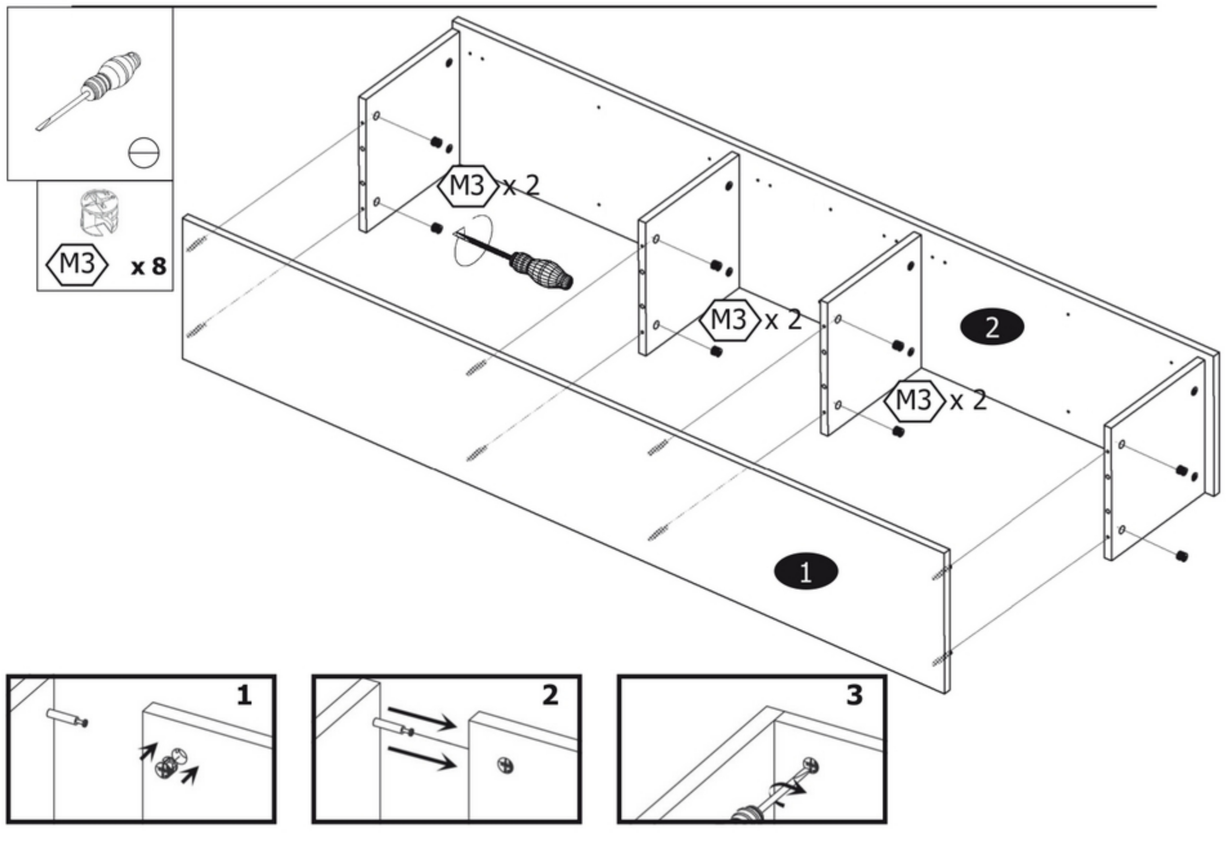
M3 x 8
M3 x 2
M3 x 2
2
M3 x 2
1
1
2
3

8

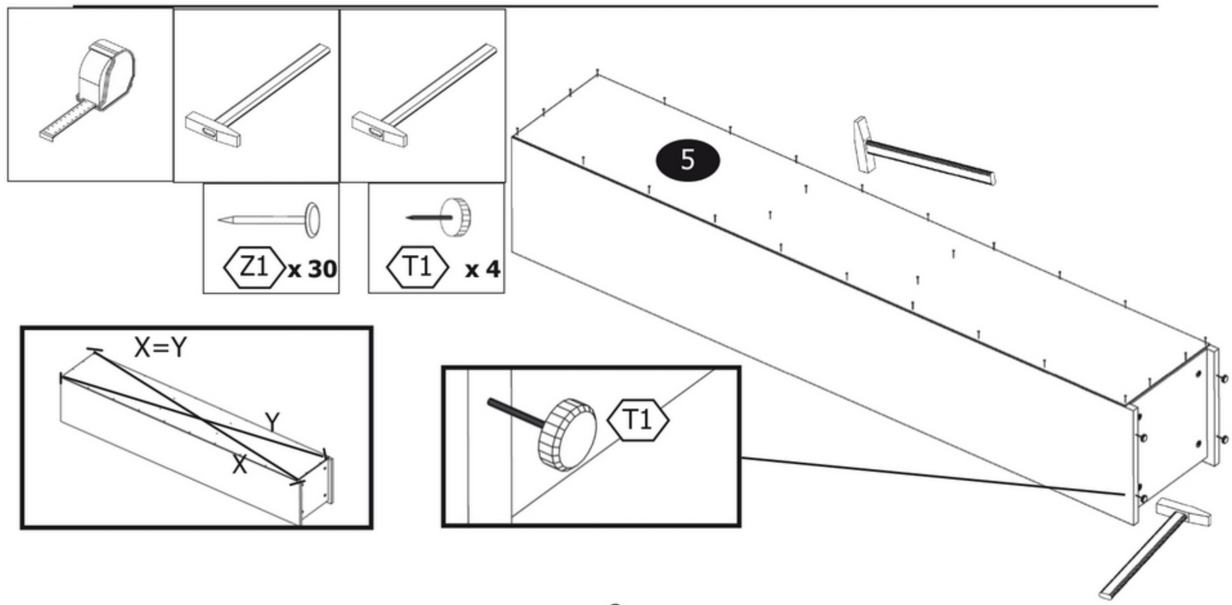
Z1 x 30
T1 x 4
5
X=Y
Y
X
T1

9

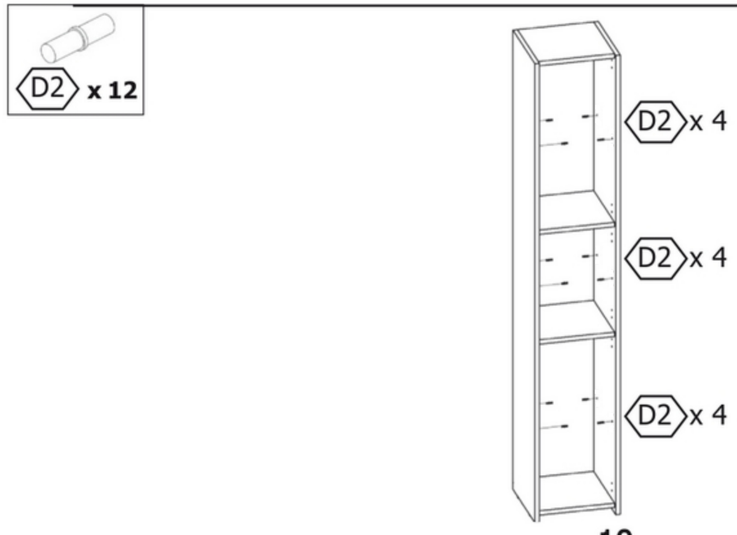
D2 x 12
D2 x 4
D2 x 4
D2 x 4

10

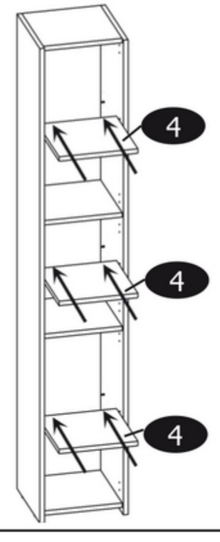
4
4
4

11

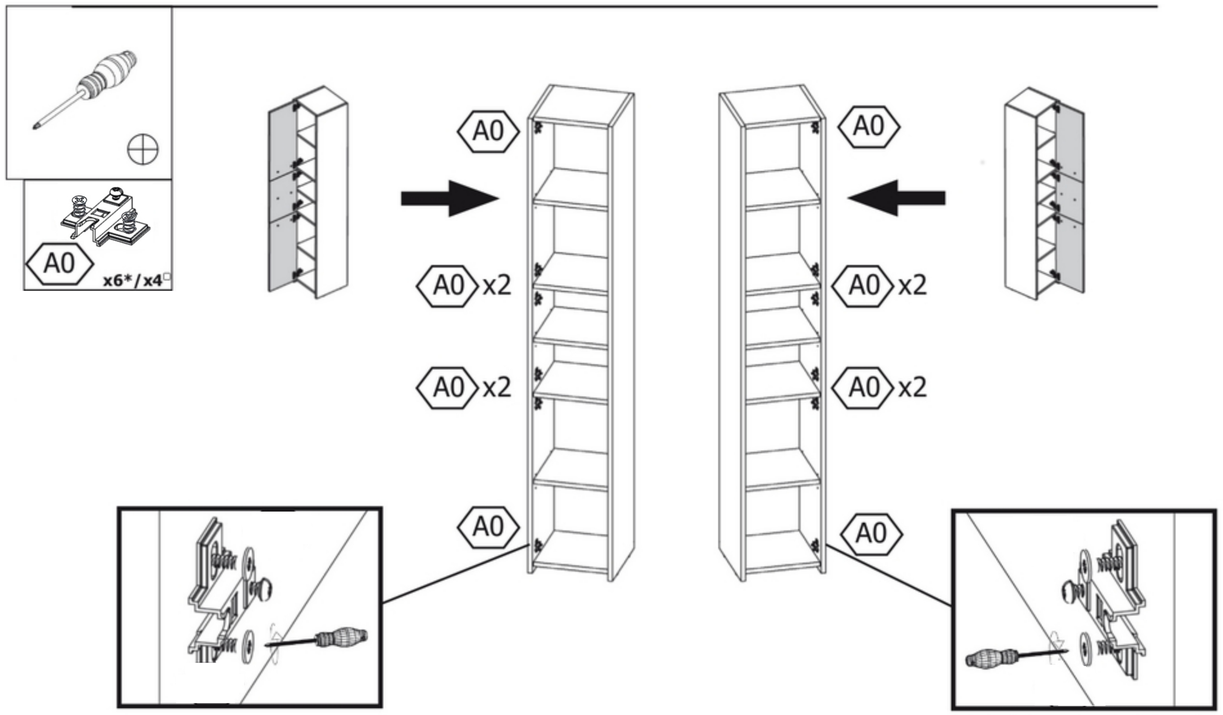
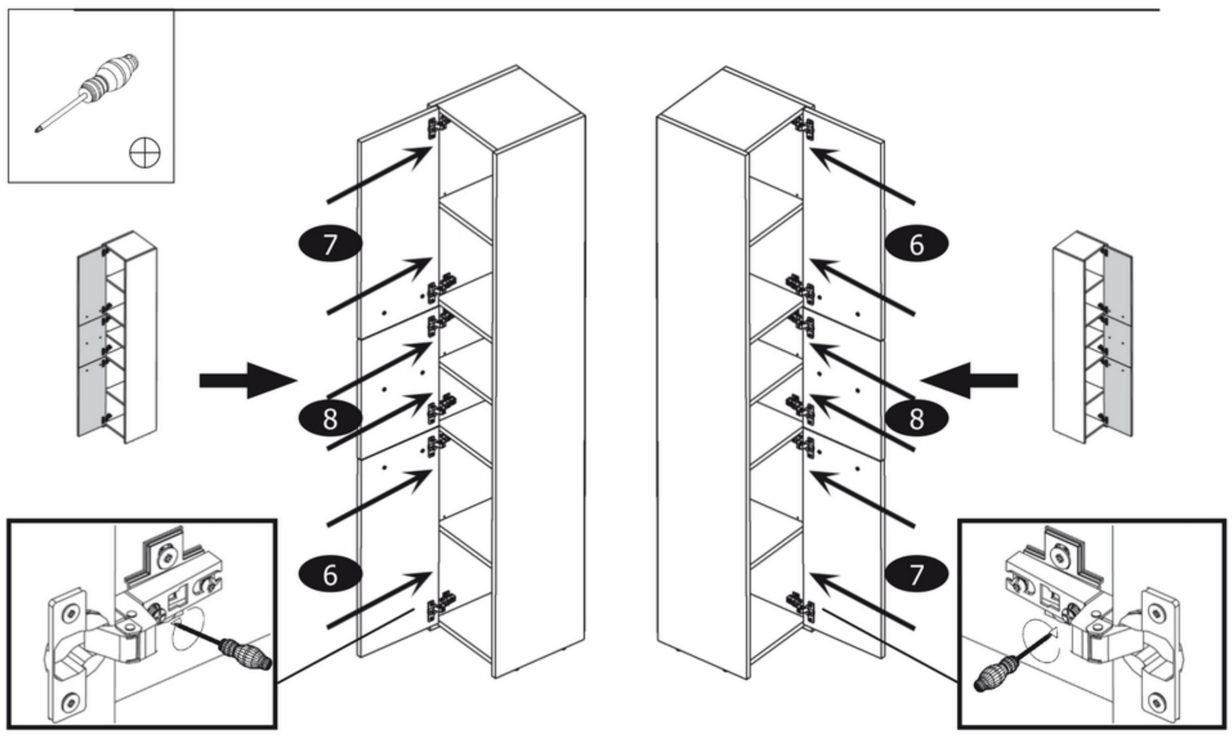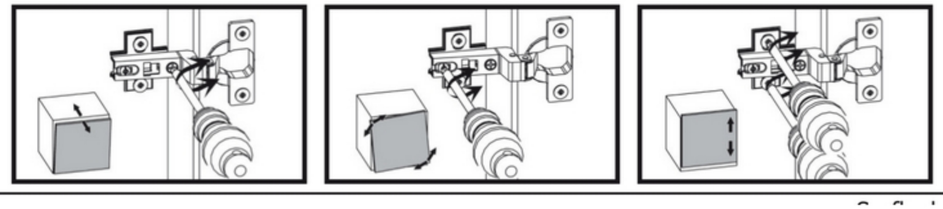
12